SF12RAIDON X3-DS-LO-R-coil-100

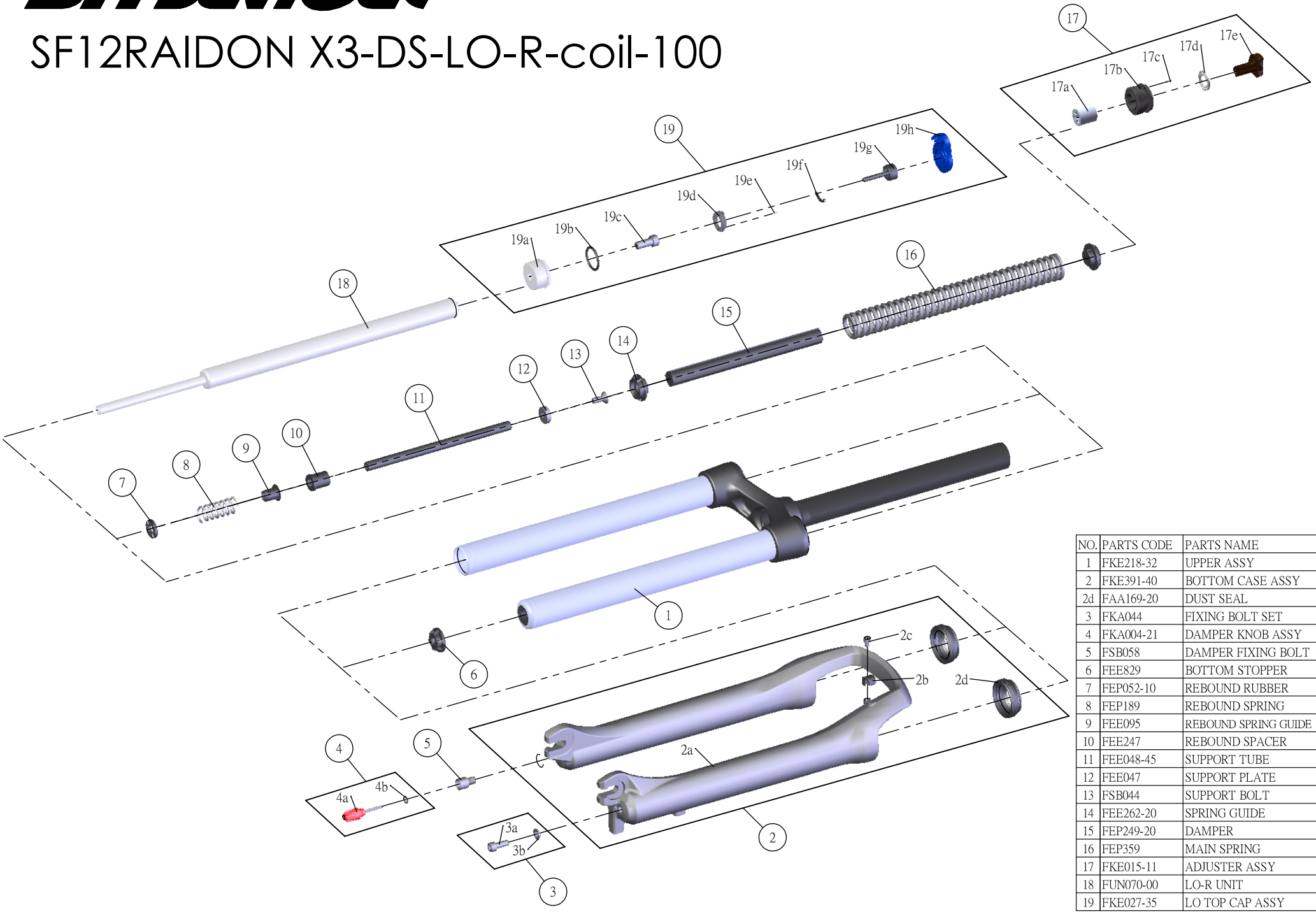

NO.	PARTS CODE	PARTS NAME	100	QT
1	FKE218-32	UPPER ASSY	*	1
2	FKE391-40	BOTTOM CASE ASSY	*	1
2d	FAA169-20	DUST SEAL	*	2
3	FKA044	FIXING BOLT SET	*	1
4	FKA004-21	DAMPER KNOB ASSY	*	1
5	FSB058	DAMPER FIXING BOLT	*	1
6	FEE829	BOTTOM STOPPER	*	1
7	FEP052-10	REBOUND RUBBER	*	1
8	FEP189	REBOUND SPRING	*	1
9	FEE095	REBOUND SPRING GUIDE	*	1
10	FEE247	REBOUND SPACER	*	1
11	FEE048-45	SUPPORT TUBE	*	1
12	FEE047	SUPPORT PLATE	*	1
13	FSB044	SUPPORT BOLT	*	1
14	FEE262-20	SPRING GUIDE	*	2
15	FEP249-20	DAMPER	*	1
16	FEP359	MAIN SPRING	*	1
17	FKE015-11	ADJUSTER ASSY	*	1
18	FUN070-00	LO-R UNIT	*	1
19	FKE027-35	LO TOP CAP ASSY	*	1