SR SUNTOUR

SF9-AXON-RL

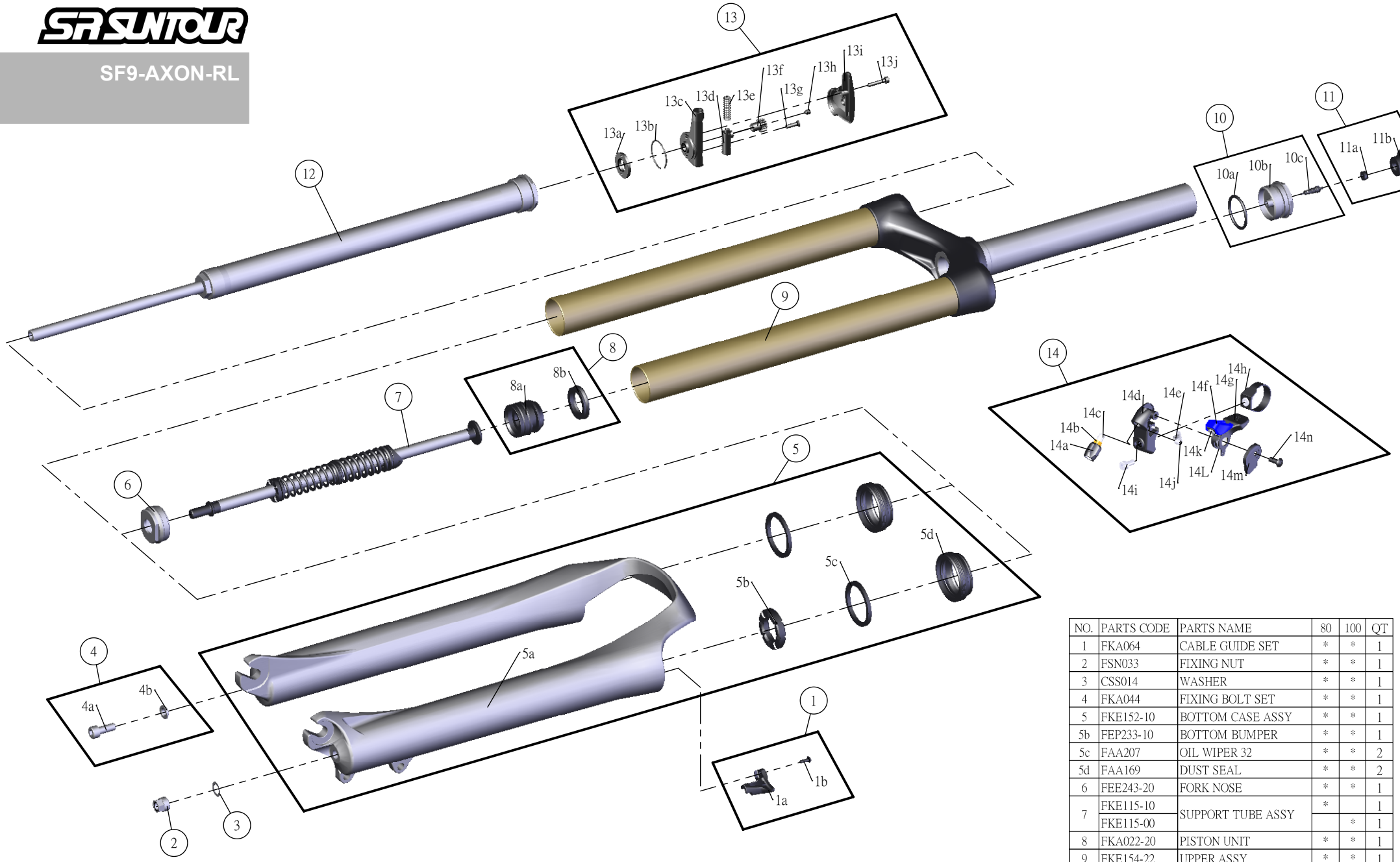

NO.	PARTS CODE	PARTS NAME	80	100	QT
1	FKA064	CABLE GUIDE SET	*	*	1
2	FSN033	FIXING NUT	*	*	1
3	CSS014	WASHER	*	*	1
4	FKA044	FIXING BOLT SET	*	*	1
5	FKE152-10	BOTTOM CASE ASSY	*	*	1
5b	FEP233-10	BOTTOM BUMPER	*	*	1
5c	FAA207	OIL WIPER 32	*	*	2
5d	FAA169	DUST SEAL	*	*	2
6	FEE243-20	FORK NOSE	*	*	1
7	FKE115-10	SUPPORT TUBE ASSY	*		1
	FKE115-00			*	1
8	FKA022-20	PISTON UNIT	*	*	1
9	FKE154-22	UPPER ASSY	*	*	1
10	FKE075-04	AIR CAP ASSY	*	*	1
11	FKE076-10	VALVE CAP ASSY	*	*	1
12	FUN021-32	RL UNIT	*	*	1
13	FKE112	RL REMOTE ASSY	*	*	1
14	SL9SC-RLO	REMOTE CONTROL LEVER	*	*	1