SR SUNTOUR

SF7-NRX-LO

model year 2007

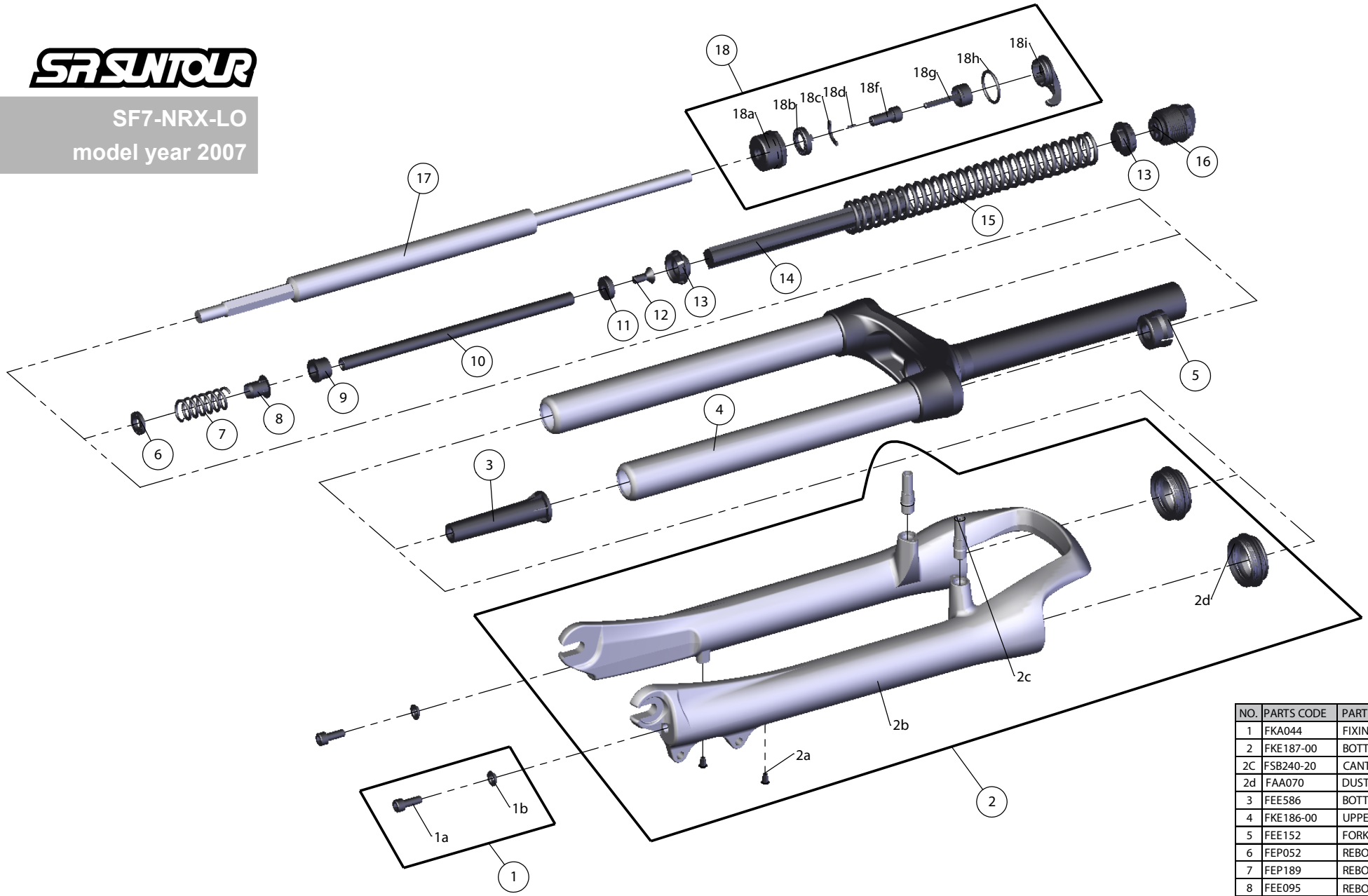

NO.	PARTS CODE	PARTS NAME	QT
1	FKA044	FIXING BOLT SET	2
2	FKE187-00	BOTTOM CASE ASSY	1
2C	FSB240-20	CANTI BOSS	2
2d	FAA070	DUST SEAL	2
3	FEE586	BOTTOM STOPPER	1
4	FKE186-00	UPPER ASSY(TS,255/0)	1
5	FEE152	FORK NOSE	1
6	FEP052	REBOUND RUBBER	1
7	FEP189	REBOUND SPRING	1
8	FEE095	REBOUND SPRING GUIDE	1
9	FEE290-03	REBOUND SPACER	1
10	FEE048-26	SUPPORT TUBE	1
11	FEE047	SUPPORT PLATE	1
12	FSB044	SUPPORT BOLT	1
13	FEE434	SPRING GUIDE	2
14	FEP249-10	DAMPER	1
15	FEP335	MAIN SPRING	1
16	FKE052-03	ADJUSTER ASSY	1
17	FUN006-14	DAMPER UNIT	1
18	FKE027-33	LO TOP CAP ASSY	1